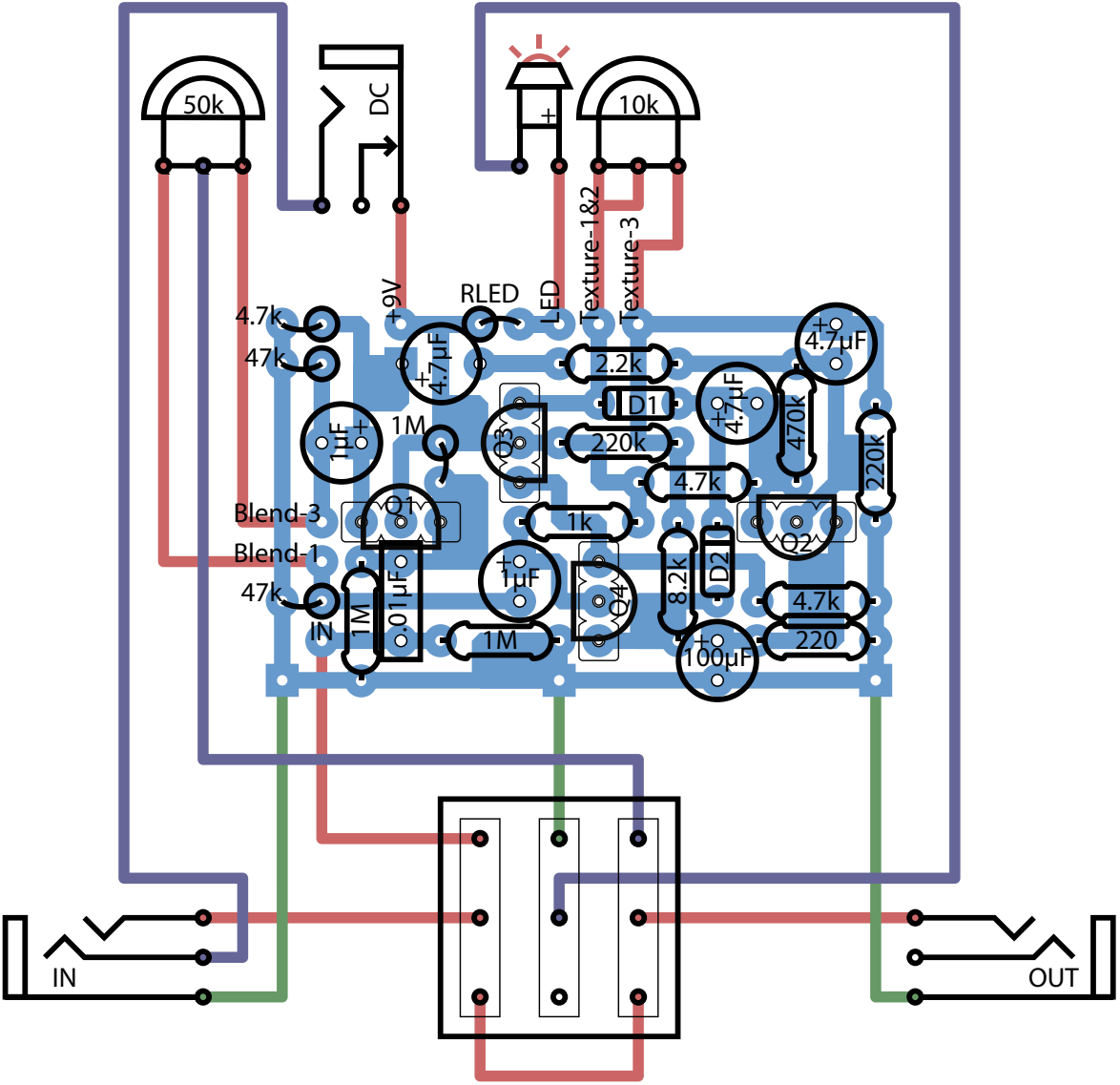
50k
DC
10k
+
Texture-1&2
Texture-3
+9V
RLED
LED
4.7k
47k
4.7µF
2.2k
D1
4.7µF
470k
4.7µF
1µF
1M
Q3
220k
4.7k
220k
Blend-3
Q1
1k
Q2
Blend-1
1µF
8.2k
D2
47k
.01µF
Q4
4.7k
IN
1M
1M
100µF
220
IN
OUT