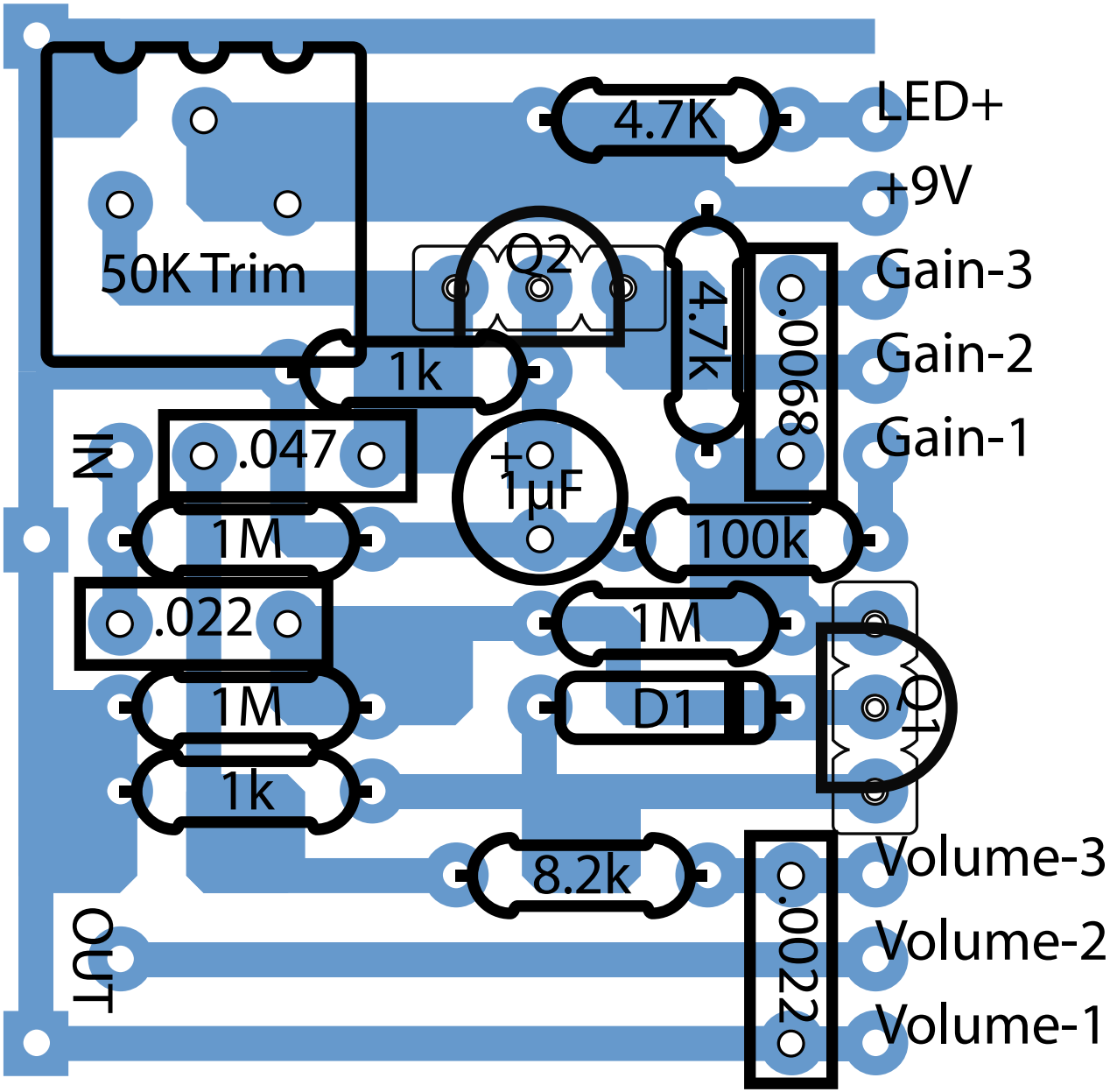
4.7K
LED+
+9V
50K Trim
Q2
4.7k
.0068
Gain-3
Gain-2
Gain-1
1k
IN
.047
1µF
1M
100k
.022
1M
1M
D1
Q1
1k
8.2k
.0022
Volume-3
Volume-2
Volume-1
OUT