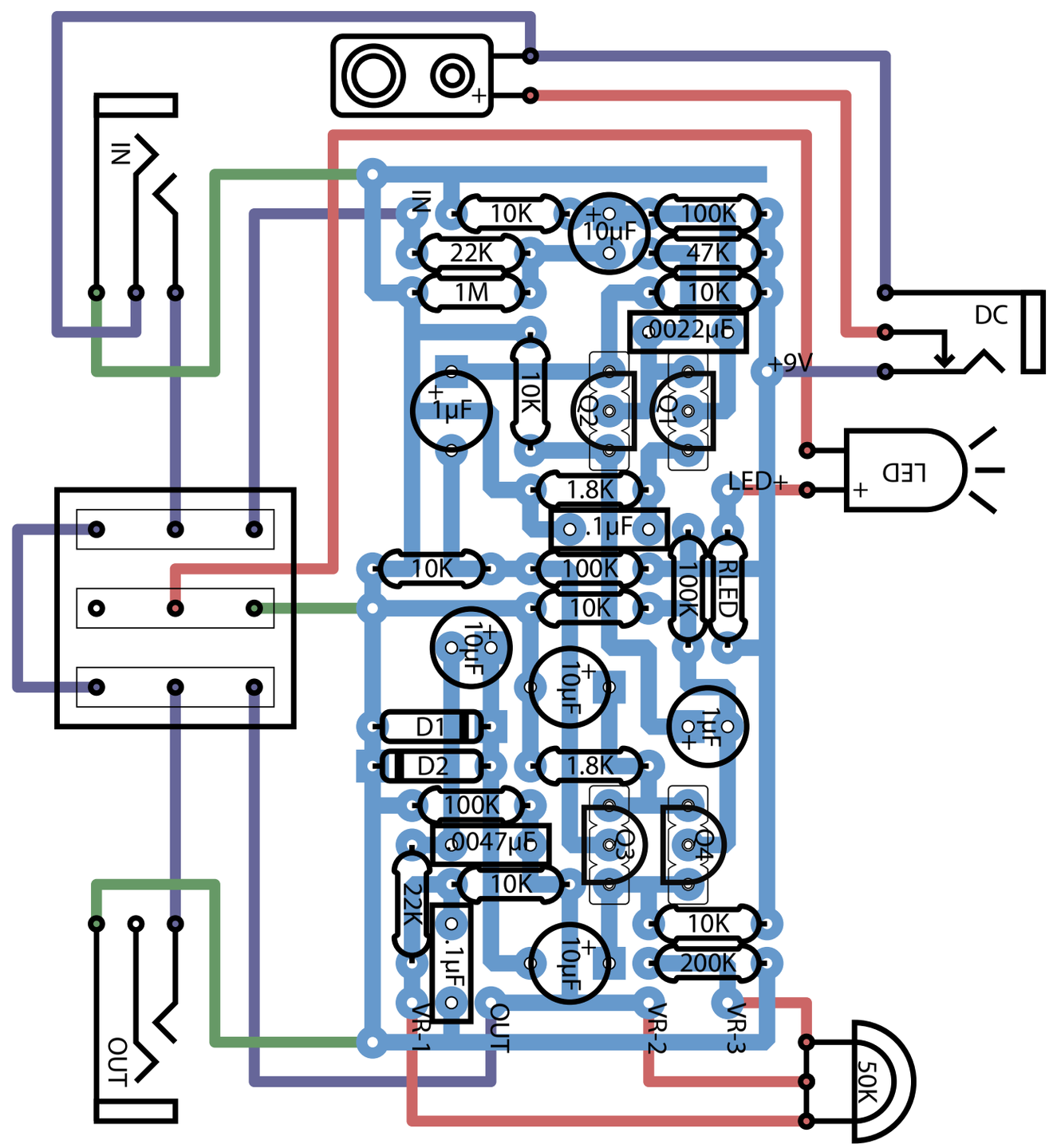
IN
OUT
DC
+9V
LED
LED+
50K
VR-1
VR-2
VR-3
10K
22K
1M
10µF
100K
47K
.0022µF
1µF
1.8K
.1µF
RLED
D1
D2
.0047µF
200K